Translation of original user manual

Revision A

USER MANUAL

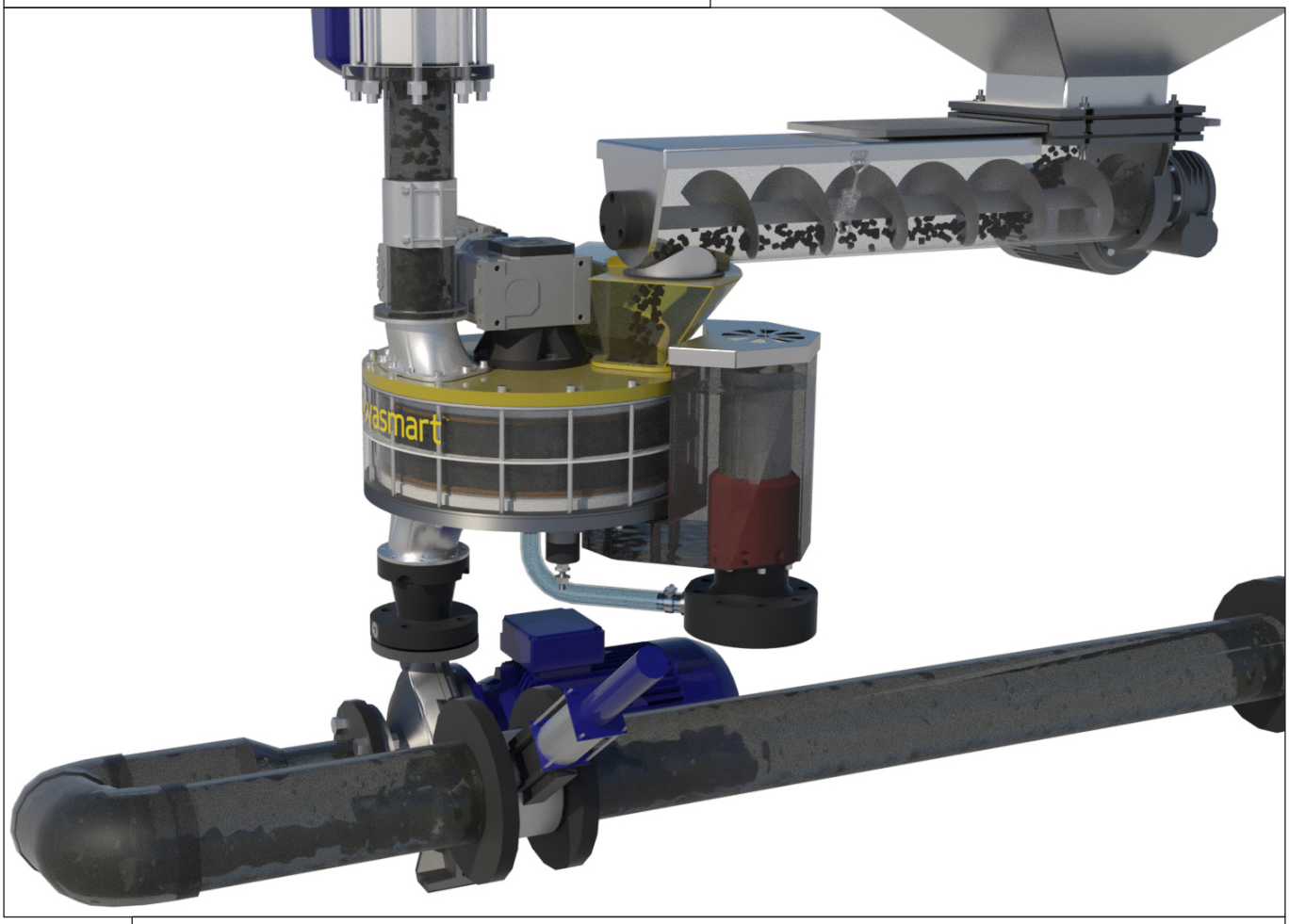

WATERBORNE FEEDING SYSTEM

Technology for sustainable biology

AKVA GROUP™

Thank you for choosing AKVA group

AKVA group develops, manufactures and supplies technology and services aimed at solving biological and technical challenges in the global aquaculture industry. All our products, from single components to service assignments and complete farms, are designed to achieve the best possible fish welfare, operational performance and profitability for our customers.

We aim to write easy to understand user manuals, while providing as accurate and updated information as possible. In order to do this, we rely on input, feedback and collaboration with people who use our products. We appreciate all the input we have received, as this helps us provide better and safer equipment and solutions. Please contact us through our websites with questions or suggestions for improvements.

This manual is written with the purpose of complying with the standard NEK EN 82079-1 and NS-9415.

For a thorough introduction to your AKVA group product, carefully read through this user manual before assembling, installing or using the product. Our user manuals are available from our website: www.akvagroup.com/user-manuals.

Together we can contribute to making sure that fish farming is an environmentally friendly, sustainable and growing industry that produces safe and healthy seafood for a global market.

Best regards,
AKVA group

TABLE OF CONTENTS

ABBREVIATIONS AND GLOSSARY 4

1 HEALTH AND SAFETY 5
1.1 SAFETY SYMBOLS 5
1.2 ABOUT THE USER MANUAL 5
1.3 TECHNICAL CONDITION 6
1.4 RECEIVING EQUIPMENT 6
1.5 USER SAFETY 6
1.5.1 EMERGENCY STOP 7

2 ABOUT WATERBORNE FEEDING SYSTEM 8
2.1 FEED TRANSPORT 8
2.2 TECHNICAL SPECIFICATIONS 8

3 SYSTEM COMPONENTS 9
3.1 FEEDING WATER PUMP 10
3.2 FEED AUGER 10
3.3 WATER METER 10
3.4 VACUUM VALVE 10
3.5 STOP VALVE 10
3.6 WATER SLUICE 11
3.7 FEEDING PIPES 11

4 INSTALLING FEEDING PIPES 12
4.1 PLAN THE INSTALLATION 12
4.2 INSTALL FEEDING PIPES IN THE SEA 13
4.3 INSTALL ON BARGE 13
4.4 TEST FEEDING PIPE CONNECTIONS 14

5 FEED CONTROL SYSTEM 15

6 INCORPORATION WITH SYSTEM 16

7 MAINTENANCE 17
7.1 CONTROL RETURN WATER 17
7.2 CLEAN OVERFLOW FUNNEL 17
7.3 CLEAN SLUICE VALVE 18
7.4 REPAIR FEEDING PIPES 18

8 HANDLING AND STORAGE 19
8.1 HANDLING 19
8.2 STORAGE 19

9 DECOMMISSIONING 20
9.1 DISASSEMBLING 20
9.2 DISCARDED PARTS. 20

APPENDIX A - ILLUSTRATIONS AND TABLES 21

ABBREVIATIONS AND GLOSSARY

AKVAconnect	An AKVA process control platform that may be used to connect and control feeding, sensors, camera surveillance, barge control and more.
EE-waste	Discarded electrical and electronic products
Qualified personnel	Person who is trained in performing basic operations and maintenance tasks on the equipment. Technical personnel from AKVA group who execute work and operations on the system are considered qualified personnel.
lock-out/tag-out	Lock-out (physical barrier) and Tag-out (visual marking) is a safety procedure used in industry to ensure that dangerous machines are properly shut off and not able to be started up again prior to the completion of maintenance or repair work.
PE	Polyethylene - thermoplastic material
rpm	Revolutions per minute
User	Person who is going to be using the equipment
WBF	Waterborne Feeding System

1 HEALTH AND SAFETY

Safety for the User of our equipment is main focus when AKVA group ASA develop new products and product manuals.

We strongly recommend that everyone who are going to be using the AKVA product, all who perform any type of repairs, service, maintenance or other work on AKVA products, and all who work in areas where such products are installed, are aware of the contents of this manual.

This recommendation is based on both personnel safety as well as a desire to keep AKVA products in order, and to avoid risk for damages as a result of not following safety instructions.

1.1 SAFETY SYMBOLS

WARNING!
Serious health risk or other serious incidents - Safety sign that implies a danger that may cause death, serious (irreversible) personnel injuries or risk of reduced fish welfare or fish escaping.

PROTECTIVE GEAR REQUIREMENTS
Warning symbol indicating required use of personal protective equipment.

CAREFUL!
Material damages - Safety sign that implies a situation that may cause damages to the product or items in the product surroundings.

NOTE!
Symbol that implies useful hints and recommendations for efficient use of the product.

RECYCLING
Warning symbol regarding recycling, waste management and disposal.

GO TO
Symbol that indicates a link to a page or section with further information. Click on underlined words to go to the reference or open the link.

1.2 ABOUT THE USER MANUAL

The purpose of this user manual is to enable Qualified personnel to install, use and maintain the Waterborne Feeding System (hereafter also referred to as the WBF) in a safe, secure and financially sustainable manner. The user manual provides answers for the User to the most common questions regarding operation and maintenance, and shall be considered as part of the WBF equipment. The user manual shall be read before use and used as aid when working on or with the equipment. Note that the illustrations in this manual will not always comply with the actual product.

1.3 TECHNICAL CONDITION

The Waterborne Feeding System shall never be operated if any component is not properly installed by Qualified personnel. Only qualified personnel can perform installation and maintenance of the system.

Equipment shall never be used if it is not in perfect technical condition. To avoid using defective equipment, follow the procedures in this user manual. If any of the equipment is used in a defective condition, the safety functions will be impaired.

Use only original spare parts supplied by AKVA group. Unauthorized rebuilding and modifications of the equipment is not recommended.

1.4 RECEIVING EQUIPMENT

Equipment must be handled very carefully during transport, when equipment is unpacked, when moving to and from the sea and during storage. Make sure that all parts specified in the delivery note have been received. If the order is not complete, or in case of damage during transport, contact AKVA group immediately.

Handle the components carefully during transport, when unpacking, moving and during storage. We recommend that the equipment is controlled and installed by AKVA service personnel.

1.5 USER SAFETY

Electrocution hazards and risk of serious incidents to User are linked to the following parts of the system:

- Main power switch in main power cabinet.
- Frequency converters in main power cabinet.
- Connections to engines powering sluice, water pump and feed screw.
- Power supply to main power cabinet (even when main switch in the cabinet is turned off).
- Electrical installations and maintenance thereof, shall always be performed by Qualified personnel.

As a main rule, power for the entire Waterborne Feeding System must be turned off and secured in off position (lock-out/tag-out) during execution of any work such as installation, maintenance and repairs. Troubleshooting will however, on some occasions, have to be carried out with main power turned on. On such occasions, it is very important that all personnel staying in the area where the WBF is installed, and especially around other rotating equipment), are aware of the hazards related to the system. To ensure safe operations, perform all tasks according to descriptions in this manual.

The Waterborne Feeding System has automatic start-up through user-defined settings. Covers on the pumps, feed auger and sluice shall never be removed while feeding, and only removed for maintenance and then replaced immediately after.

When feeding with the Waterborne Feeding System, the water pressure inside feed pipes will reach up to 4 bar. Feed pipes must not be cut during feeding, and if cutting is required, this shall only be executed by qualified personnel.

Anyone operating or maintaining the Waterborne Feeding System shall be familiar with:

- How the system functions with the rest of the site and barge where it is installed.

- Which safety considerations must be taken into account during maintenance and other tasks performed on or around the system.
- How the Waterborne Feeding System work and how to use it.
- How to maintain the Waterborne Feeding System according to procedures outlined in this user manual.

1.5.1 EMERGENCY STOP

An emergency stop overrides all other control functions, cuts off the power supply to machinery and stops all moving parts controlled by the system.

Emergency- and service switches shall be easy to access at all times, and shall never be blocked.

All Waterborne Feeding System engines are connected to the emergency stop system. Every User of the system shall familiarise themselves with locations of emergency stop switches, and the equipment to which each one is connected.

Emergency stop shall only be activated in the event of risk of personnel injury or damage to equipment. Review and correct the cause of any emergency before restarting the system.

After an emergency stop, the emergency stop switch must be deactivated at the site where it was activated. Reset the Waterborne Feeding System in order to be ready to restart.

2 ABOUT WATERBORNE FEEDING SYSTEM

The Waterborne Feeding System components dose and transport feed pellets with water from silos to fish in pens controlled by the AKVAconnect feeding software.

Waterborne Feeding is a flexible system that may be installed on new barges, incorporated in rebuilds of existing operational barges, or installed on land. Placement of the system is adapted to each barge and, in combination with Flexible Feeding System with buffer tanks, will significantly improve the efficiency of feeding.

Waterborne Feeding consists of: feed auger, motorised sluice, water pump, sensory technology (pressure gauges and water meters), belonging water inlets, valves, hoses, pipes and fittings.

2.1 FEED TRANSPORT

Pellets are released from the buffer tank/silo into the feed auger. The auger moves feed from the silo to the sluice inlet, and the auger speed determines the amount of pellets that is transported to the sluice. Filtered water is pumped into the sluice when pellets enter the sluice, and water and pellets are carefully combined. The sluice is the systems transition between the low pressure and the high pressure sides by continuously rotating at a predefined speed. This process ensures careful treatment of the pellets, and avoids breakage. A sensory pressure gauge installed before and after the sluice provides input to AKVAconnect, enables warning to User in the event of a significant pressure deviation. When pellets enter the sluice, some of the water will be displaced, and flow out of the sluice and into an overflow funnel mounted on the side of the water sluice. Pellets and water are pumped out of the water lock and up to the vent valve, which is mounted at the highest point on the feed line. Furthermore, the pellet-water-mix is transported to the belonging cage. Install the feed pipe to a restrainer at the transition from barge to sea.

2.2 TECHNICAL SPECIFICATIONS

Table 1: Feed auger specifications

Materials	POM, Stainless Aluminum, Iron
Weight	Approximately 30 kg
Motor effect	0.75 kW
Auger speed	0-58 rpm

Table 2: Sluice specifications

Materials	POM, Stainless Aluminum, Iron, Silicone
Weight	Approximately 95 kg
Motor effect	0.55 kW
Max rotation	22 rpm
Max feed rate capacity	120 kg/min
Nominal operation pressure	4 bar

3 SYSTEM COMPONENTS

Illustration 2: WBF with silo and pipe restrainer

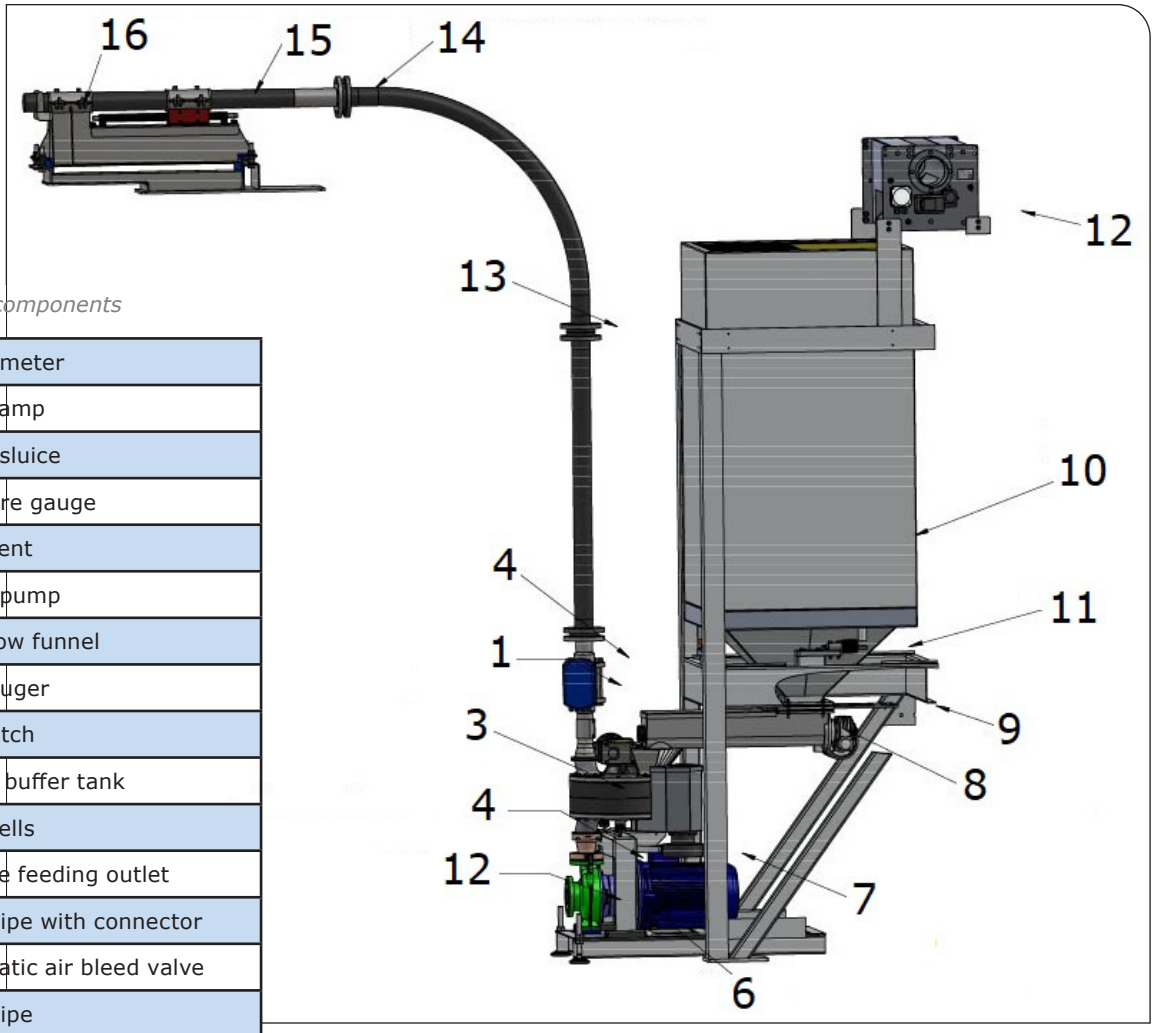

Table 3: WBF components

1	Water meter
2	Pipe clamp
3	Water sluice
4	Pressure gauge
5	Stop vent
6	Water pump
7	Overflow funnel
8	Feed auger
9	Silo hatch
10	Silo or buffer tank
11	Load cells
12	Flexible feeding outlet
13	Feed pipe with connector
14	Automatic air bleed valve
15	Feed pipe
16	Restrainer

Illustration 1: Waterborne Feeding System components

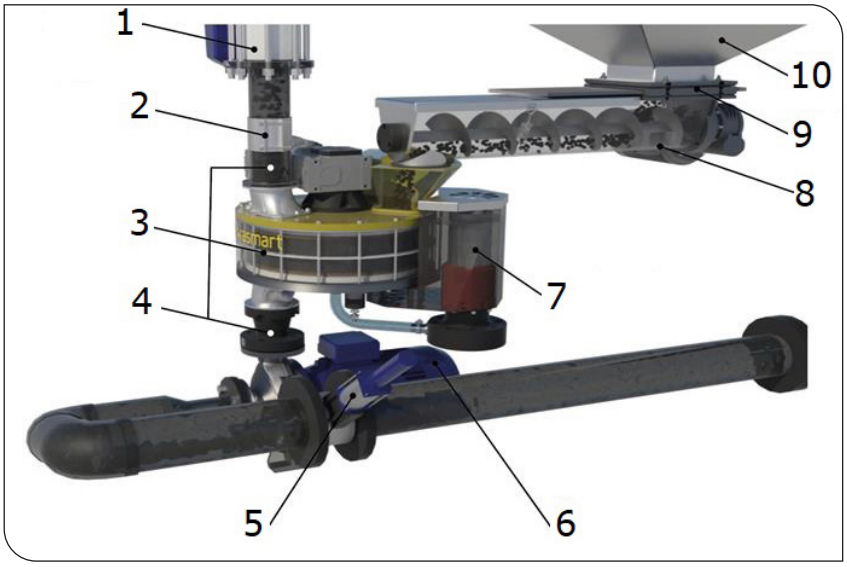

3.1 FEEDING WATER PUMP

Water intake to sluice may be done by various customized methods, for instance:

- Pump with coarse filter is placed in the sea, mounted at the inlet. The pump is connected to pipes which are mounted at the feed sluice.
- The pump is connected to the barge water intake system. The pump generates water flow transporting pellets out to the cage.

Water speed is adapted and set for each individual system. The water pump is controlled by AKVAconnect via a frequency converter. Use and maintenance of pumps is described in separate pump user manual, which is delivered with the system. It is possible to use a return water pump on barges that is mounted under the overflow funnel, and recycles the water back to manifold.

3.2 FEED AUGER

The feed auger transports pellets from the buffer tank/silo to the sluice. Adjust speed to manage pellet dose added to the water flow. The auger is controlled by AKVAconnect via a frequency converter.

3.3 WATER METER

The water meter is installed after the sluice and indicates water speed in litres per second. This measurement is converted to meters per second in the feeding software (AKVAconnect).

Illustration 3: Water meters installed on several WBF's

3.4 VACUUM VALVE

A vacuum valve is located at the highest point in the water supply system to stop a siphoning effect in the event of water penetration into the barge pipe system. By letting air into the system, the water flow will be stopped.

3.5 STOP VALVE

The stop valve is fitted to the pump water inlet. The stop valve prevents water penetration and may stop the feeding process. The valve is controlled by and provides feedback to AKVAconnect.

3.6 WATER SLUICE

In the water sluice, pellets are mixed with water before it is transported to the pens via feeding pipes. The feed quantity is programmed in the feeding software for each feedline. Sluices are designed to minimise the mechanical impact on pellets, to avoid breakage.

Recommended rotational speed is 13 rpm.

Illustration 4: Water sluice as seen from above

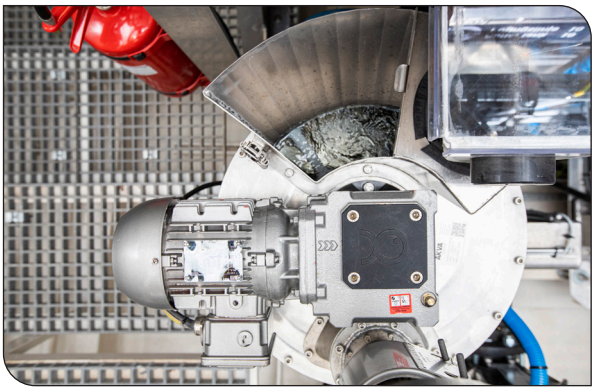

Table 5: Water sluice components

17	Motor
19	Water intake
18	Water and feed outlet
20	Overflow internal pressure equalizer
21	Return water outlet
7	Overflow funnel
22	Down pipe from auger

Illustration 5: Water sluice components

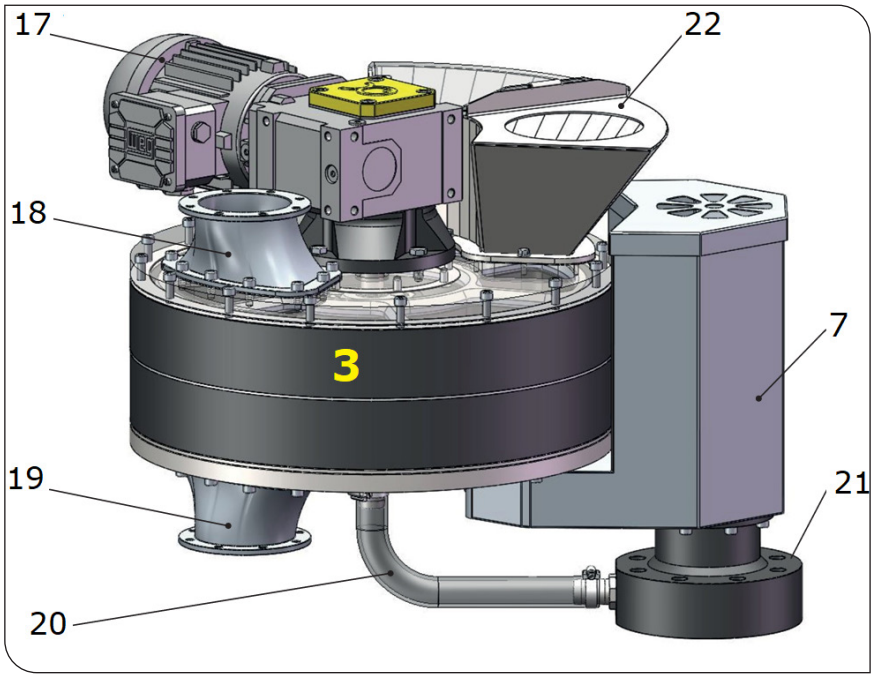

3.7 FEEDING PIPES

Feeding pipes between barge and pen are laid out as straight as possible and have exact length, and are bundled together to prevent wearing. Project-specific information for each WBF is provided for barge attachment points with restrainers.

Recommended dimensions for feeding hoses are presented in table 3: Feeding pipe specifications.

Recommended water velocity is intended to minimise sediment and biological growth in the feeding hoses. This must be adjusted on each line as the speed of the water pump will depend on the length of the hose.

Table 4: Feeding pipe specifications

External diameter	90 mm
Recommended class specification	13.5
Material quality	PE-100
Recommended water velocity	1.5-1.75 m/s
Material	Polyethylene
Minimum bend radius	1800 mm
Recommended maximal length	800 meter

4 INSTALLING FEEDING PIPES

The Waterborne Feeding System components are installed by Qualified personnel and/or AKVA service personnel. Service and repairs to the components shall also be performed by qualified personnel/AKVA service personnel.

Feed pipes can be installed, spliced and replaced by users, as instructed in this user manual.

For distances between barge and pen longer than the maximum length of feed pipes, two or three hose lengths are connected. We recommend using a fixing sleeve when splicing feed pipes. Be careful to ensure that all connections are perfectly executed.

4.1 PLAN THE INSTALLATION

Required equipment:

- Pen and paper (or similar to draw up a sketch)

Procedure:

1. Draw up a sketch over the barge and pens, and number the feedlines and pens.
2. Calculate approximate distance from restrainers to belonging pen, and find which pipes have to be cut, and which needs to be connected and extended.
3. When using two or more feedlines, decide which lines shall feed which pen.
4. Draw in feeding pipes from restrainer to pen on the sketch.
5. Control the sketch and check the following:
   a. Are all pens available from boat? The way around the pens shall not be obstructed by feeding pipes (current for sites where walking from pen to pen is not possible, such as for plastic pens).
   b. Are any feeding pipes crossing? This may cause wearing and be confusing for both installer and feeder.
   c. Is it required to change the sketch setup for a more practical and user friendly feeding site? Then we recommend correcting before commencing the installation, to avoid having to do it after the hoses are installed.

Illustration 6: Example of feedline planning

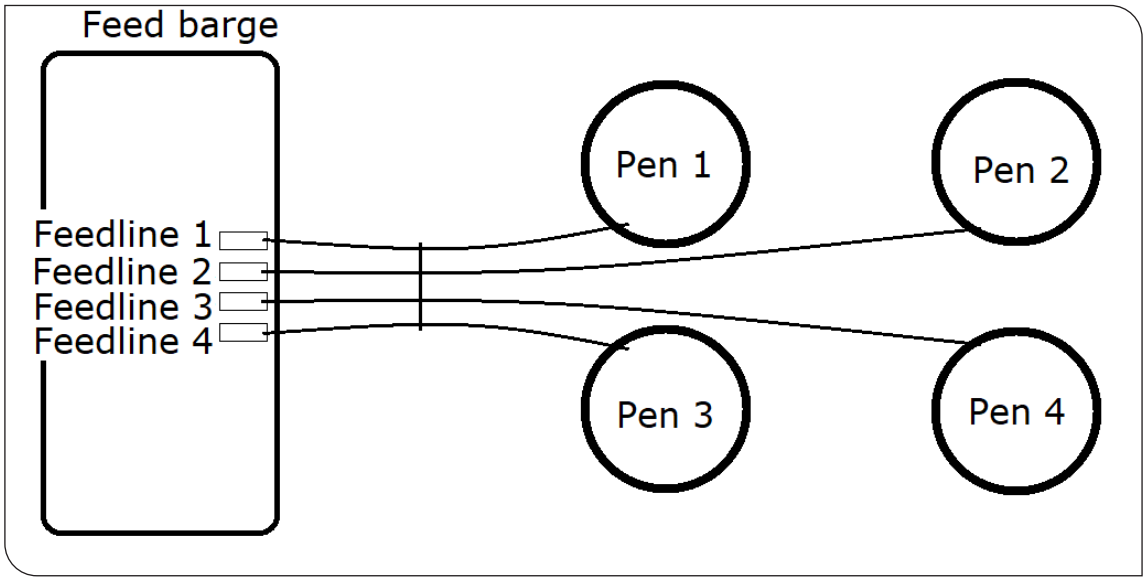

4.2 INSTALL FEEDING PIPES IN THE SEA

PROTECTIVE GEAR REQUIREMENTS
It is mandatory to wear floating garments when working in, on or by water or sea.

Required equipment:
- Saw to cut feeding pipes
- Boat
- Ropes to attach feeding pipes to barge and pen
- Electro-fusion coupler and associated installation equipment

Procedure:
1. Cut and splice pipes where extra lengths are required. Use a electro-fusion coupler with heating wires to connect two pipes. Follow procedure from electro-fusion coupler manufacturer.
2. Drop one feeding pipe length into the sea at a time, and attach one end with a rope to a static point on the barge, or at a location near where the barge restrainer is mounted.
3. Attach the other end of the feeding pipe with rope to the boat and bring it out to the corresponding pen.
4. Attach the feed pipe outlet to the pen so that the opening points towards the cage, and at the same time point slightly upwards, or connect the feed hose to the feed spreader where it is to be used.
5. Repeat for all the feeding pipes, and have a full overview before connecting pipes to the feeding system.

4.3 INSTALL ON BARGE

Illustration 7: Adjustable restrainer

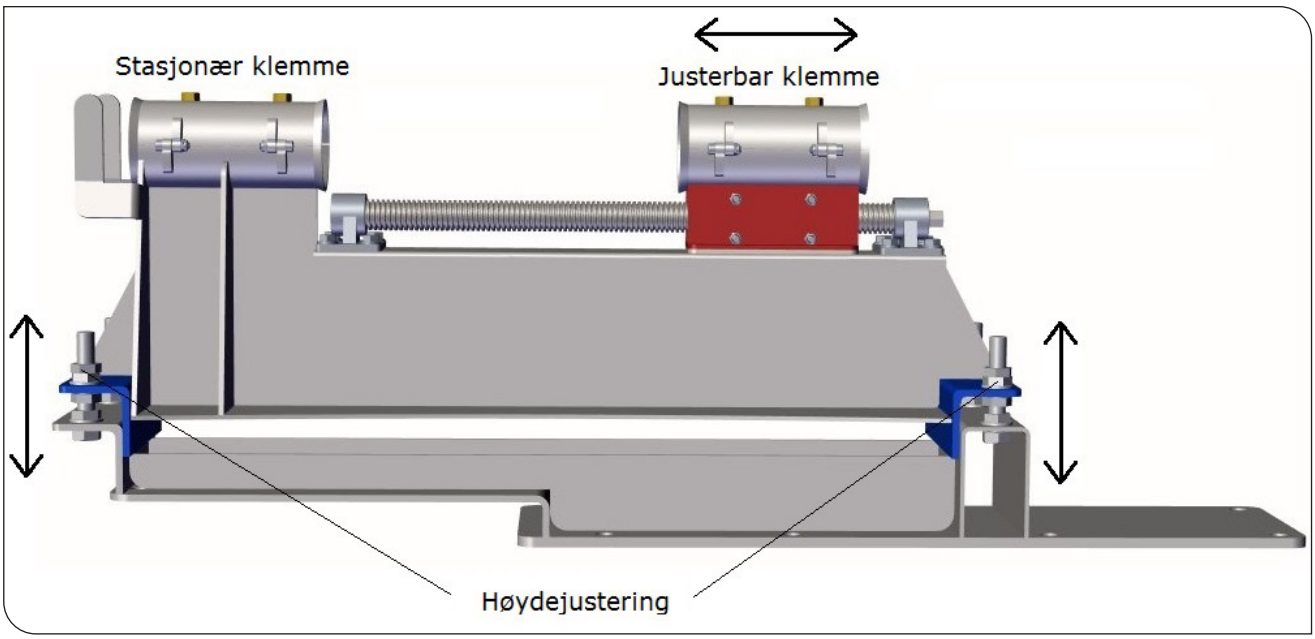

Required equipment:
- Wrench 30 mm
- Hot air gun

Procedure:
1. Install lock-out/tag-out on the corresponding feeding line.
2. In the restrainer (illustration 7: Adjustable restrainer): Centre the horizontally adjustable pipe clamp on the threaded shaft so that it may be adjusted equally both ways.
3. Open both pipe clamps on top of the restrainer (the horizontally adjustable and the stationary).
4. Place the feeding pipe over both of the open clamps.
5. Attach the pipe end to the WBF outlet pipe:
   a. Use a hot air gun to heat the pipe end.
   b. Thread the pipe end over the entire outlet pipe.
   The feeding pipe will stick around the outlet when it is cooled down.
6. Close the restrainers adjustable pipe clamp and secure it around the feeding pipe.
7. Make required adjustments so that the pipe is installed as straight as possible:
   a. Turn the threaded shaft to move the pipe towards or away from the outlet.
   b. Release the height adjustment nuts (one in each corner), and adjust the bolts to move the feeding pipe up- or downwards.
   c. Attach the nuts when correctly adjusted.
8. Close the stationary pipe clamp.
9. Repeat the process for all the feed pipes.

4.4 TEST FEEDING PIPE CONNECTIONS

Have one person in the control room who controls the feeding software (AKVAconnect), and one person by the pen.

Procedure:
1. Start up the feed line. For start-up instructions, see the AKVAconnect manual.
2. Send a small dose of feed through each of the hoses. Have a person by the pens who can observe if everything is working properly and that feed comes out from the correct pipe in the correct pipe at the correct time.
3. If this does not happen, go over the feeding pipe connections. Correct if any have been connected wrongly.
4. If all connections are made correctly, and the feeding does not work as planned, control other feed line components and connections for faults. Contact AKVA service personnel or installer for assistance.
5. Attach all of the feeding pipes together with a bracket, to prevent chafing on the pipe material.

5 FEED CONTROL SYSTEM

AKVAconnect is a process control platform that is used to connect and control both small local facilities and multiple locations, and everything in between. AKVAconnect is an advanced software solution for a day-to-day management of all parts of the feeding process. AKVAconnect enables feeding planning, and controls silos, group feeding, feeding cameras, barge control and more. Setup description for operating the Waterborne Feeding System is available in the built-in user manual in AKVAconnect.

Illustration 8: Control system drawing

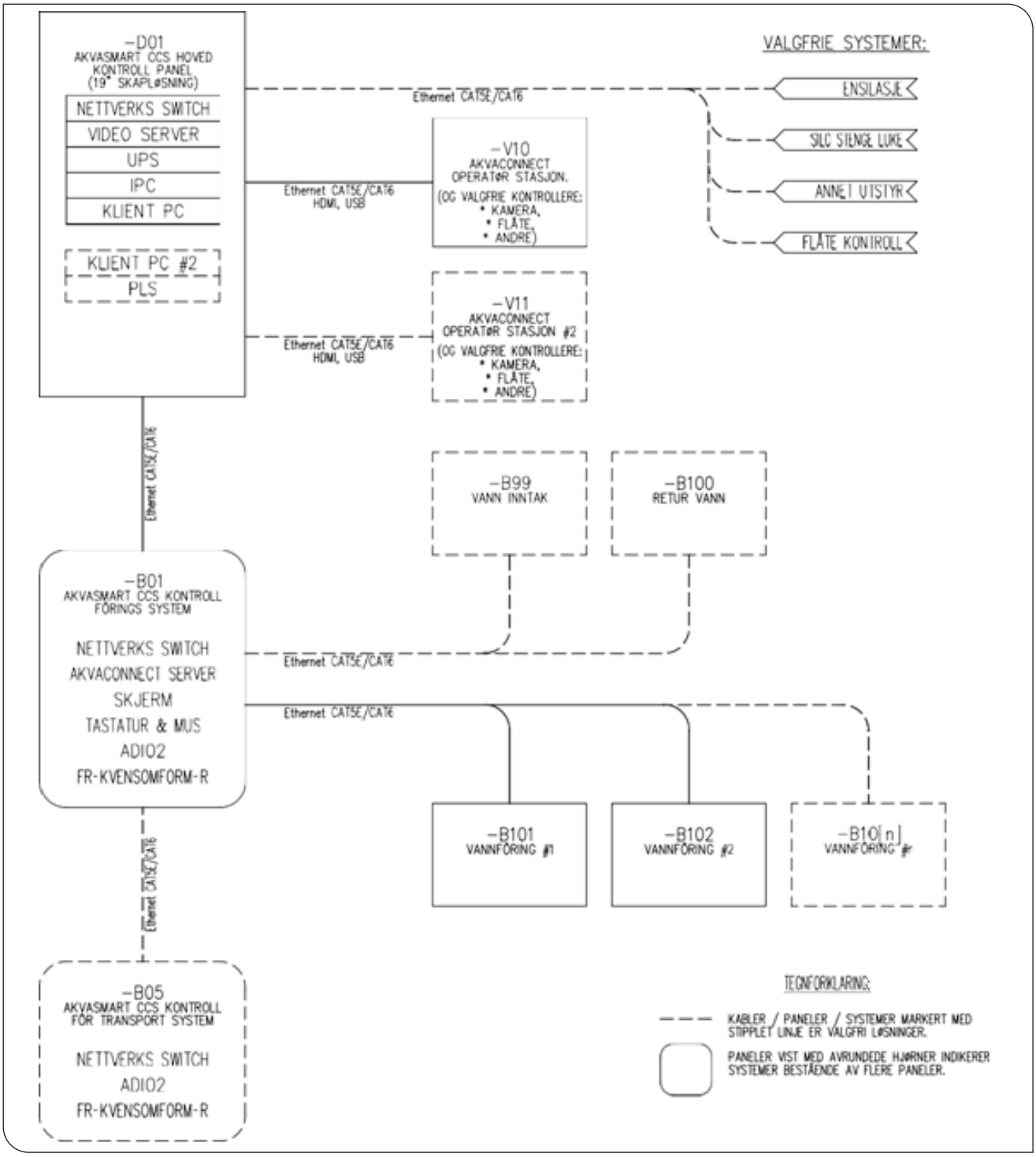

6 INCORPORATION WITH SYSTEM

Waterborne Feeding can be installed in existing barges or built into new barges.

The following additional information and project-specific information are included with each individual project: water inlet and return system, filter system, control cabinet design (sketch), modular cabinet design if required and user manuals for equipment, such as water pumps.

The following components are necessary for the water feeding system: waterproof pipe clamps, valves before pumps, suspension for pipes, water meter with connecting flanges and pipes and bends fitted to the system.

Illustration 9: WBF example installation barge inside

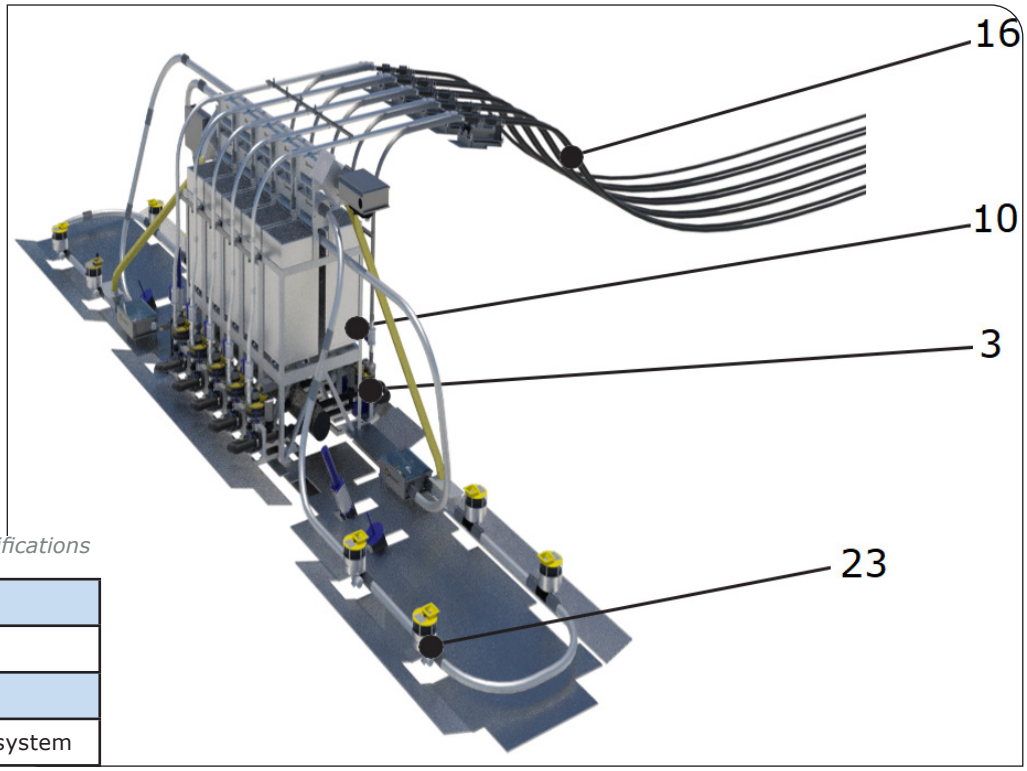

Table 6: Feeding pipe specifications

3	Water sluice
10	Buffer tank/silo
16	Feeding pipes
23	Flexible Feeding system

Illustration 10: WBF example installation barge outside

7 MAINTENANCE

WARNING!
Always install lock-out/tag-out before commencing maintenance procedures.
Close the silo hatch if the feed auger is to be removed for maintenance or service purposes.

CAREFUL!
Inspect water amount inside the return water hose. Contact AKVA service personnel for assistance if the amount of water is larger than normal.

During maintenance, the feed line Service switch shall always be turned off and locked using lockout/tagout safety procedure.

All Service switches are marked with what equipment it belongs to in the relevant language.

Illustration 11: Service switch in off position

7.1 CONTROL RETURN WATER

Visually inspect pressure equaliser in internal overflow in the pipe between the sluice lower outlet and the water outlet. This hose is mounted between centre of the water sluice bottom and the return water outlet, and is transparent, so that the amount of water flowing through may easily be inspected visually.

If the water amount is larger than normal, contact AKVA service personnel for assistance.

7.2 CLEAN OVERFLOW FUNNEL

We recommend cleaning the overflow funnel once a week and more often if required.

Required equipment:

- Industrial vacuum cleaner with a narrow nozzle

Procedure:

1. Stop the feeding in AKVAconnect.
2. Install lock-out/tag-out on the feed line sluice and feed auger.
3. Lift the overflow top cover.
4. Clean the overflow unit with the vacuum cleaner. Make sure to remove all feed residues.
5. Replace the cover.R
6. Remove Lock-out/Tag-out.

Illustration 12: Overflow funnel open

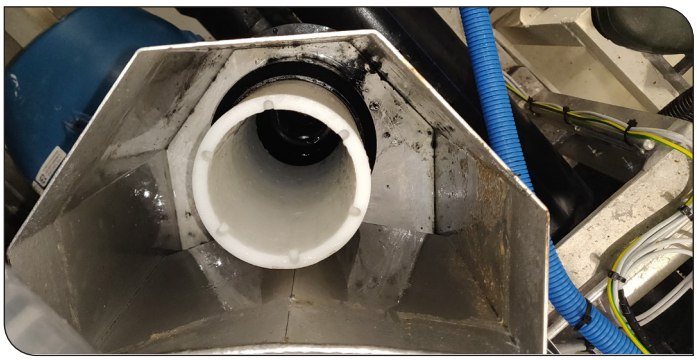

7.3 CLEAN SLUICE VALVE

We recommend cleaning the overflow funnel once a week and more often if required.

Required equipment:
- Cleaning brush

Procedure:
1. Stop the feeding in AKVAconnect.
2. Install lock-out/tag-out on the feed line sluice and feed auger.
3. Open the lock clamps.
4. Remove top cover.
5. Brush away feed residues inside the sluice downpipe.
6. Replace the cover and attach the clamps.
7. Remove lock-out/tag-out.

Illustration 13: Brush away all feed residues

7.4 REPAIR FEEDING PIPES

If damage to a feed hose occurs, the damaged part must be replaced. It is possible to change the entire feed hose, or parts of it. Stop all feeding from the current feeding line and carry out the repair.

Required equipment:
- Saw
- Splice sleeves and associated installation equipment

Procedure:
1. Install lock-out/tag-out to the belonging feeding system.
2. Saw off the entire damaged part of the feeding pipe.
3. Measure and cut up the corresponding length of a new feeding pipe part.
4. Use splice sleeve with heating wires to connect two and two hose ends. Follow the procedure from the splice sleeve manufacturer.
5. Remove lock-out/tag-out.
6. Perform the procedure in section 4.4 Test feeding pipe connections.

8 HANDLING AND STORAGE

8.1 HANDLING

When moving, lifting and handling the Waterborne Feeding system components, be careful so that they are not exposed to hard shocks or similar, as this can cause dents that may affect the system's effect and expected functions.

8.2 STORAGE

When storing Waterborne Feeding system components, the system shall be emptied of water. Required maintenance should be carried out before the equipment is left idle for an extended period.

Technical personnel from AKVA group shall be involved and check the equipment to ensure it does not suffer any damage.

All equipment must be cleaned and stored indoors in dry conditions.

9 DECOMMISSIONING

9.1 DISASSEMBLING

Contact AKVA service personnel for disassembling assistance.

9.2 DISCARDED PARTS

RECYCLING
Deliver all discarded parts to recycling.

All components of the Waterborne Feeding System shall be handled and disposed of in accordance with current regulations for waste management. Dispose of all equipment in accordance with current regulations and regulations.

Recycle as much as possible:

- Recycle all EE-waste.
- Sort and dispose of metal parts, return the various types of metal for recycling.
- Return PE plastic for recycling.

APPENDIX A - ILLUSTRATIONS AND TABLES

Illustration 1: Waterborne Feeding System components 9
Illustration 2: WBF with silo and pipe restrainer 9
Illustration 3: Water meters installed on several WBF's 10
Illustration 4: Water sluice as seen from above 11
Illustration 5: Water sluice components 11
Illustration 6: Example of feedline planning 12
Illustration 7: Adjustable restrainer 13
Illustration 8: Control system drawing 15
Illustration 9: WBF example installation barge inside 16
Illustration 10: WBF example installation barge outside 16
Illustration 11: Service switch in off position 17
Illustration 12: Overflow funnel open 17
Illustration 13: Brush away all feed residues 18

Table 1: Feed auger specifications 8
Table 2: Sluice specifications 8
Table 3: WBF components 9
Table 5: Water sluice components 11
Table 4: Feeding pipe specifications 11
Table 6: Feeding pipe specifications 16

DOCUMENT NO: DC10001545

DOCUMENT PART NO: 10005337

Rev	Date	Issued	Issued by	Reviewed by	Approved by
A	09.12.20	Approved (ECO-0001957)	EBL	IL/SG	JRE

About AKVA group

AKVA group is present in all markets with offices in Norway, Chile, Denmark, Scotland, Spain, Greece, Iceland, Canada, Australia and Turkey. AKVA group is a unique partner with the capability to offer both pen farming and land based aquaculture operations with complete technical solutions and service.

By developing technology focused on solving the biological challenges, we contribute to the continued development of a sustainable industry. Good operational performance and fish welfare are paramount in achieving good results, and investing in our technology will help deliver both.

AKVA group ASA | www.akvagroup.com
Svanavågveien 30, N-4374 EIGERSUND
NORWAY